The Development of a MEMS-based Integrated Wireless Remote Biosensors

Annual Progress Report for FY 2005

Prepared by: Dr. Wagdy Mahmoud and Dr. Esther T. Ososanya
Department of Electrical Engineering and Computer Science
School of Engineering and Applied Science
University of the District of Columbia

Date: June 2006

Prepared for the DC Water Resources Research Institute
Funds provided by USGS through the US Department of Interior

Introduction

The aim of this research is to study the feasibility of the design and implementation of an integrated wireless, low-power embedded biosensor monitoring system for the acquisition and transmission of biological functions from aquatic animals. The final goal of the research is to design a MEMS-based biosensor that can be integrated with a mixed-mode ASIC chip comprising of preamplifier, band-pass filter, analog amplifier, D/A module, modulator, transmitter, and a digital controller. The design will integrate MEMS, wireless communication, VLSI, and system-on-chip (BioSilico) technologies in the design of a low power environmental monitoring device. A schematic diagram of the digital communication system is shown in Figure 1.

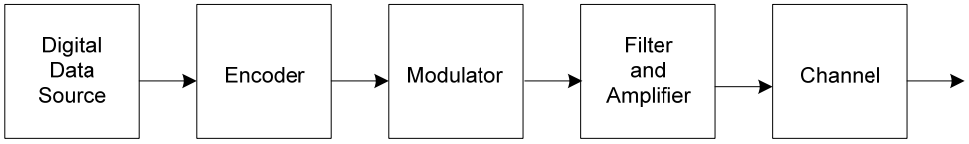

Fgure 1: Schematic Diagram of the Transmitter for a digital Communication System

A large portion of the system has already been designed in a prototype level. The designed components include the preamplifier (shown in Figure 2), a two-stage band pass filter consisting of a low-pass filter (Sown in Figure 3) and a high pass filter (shown in Figure 4), and a variable gain amplifier shown in Figure 5.

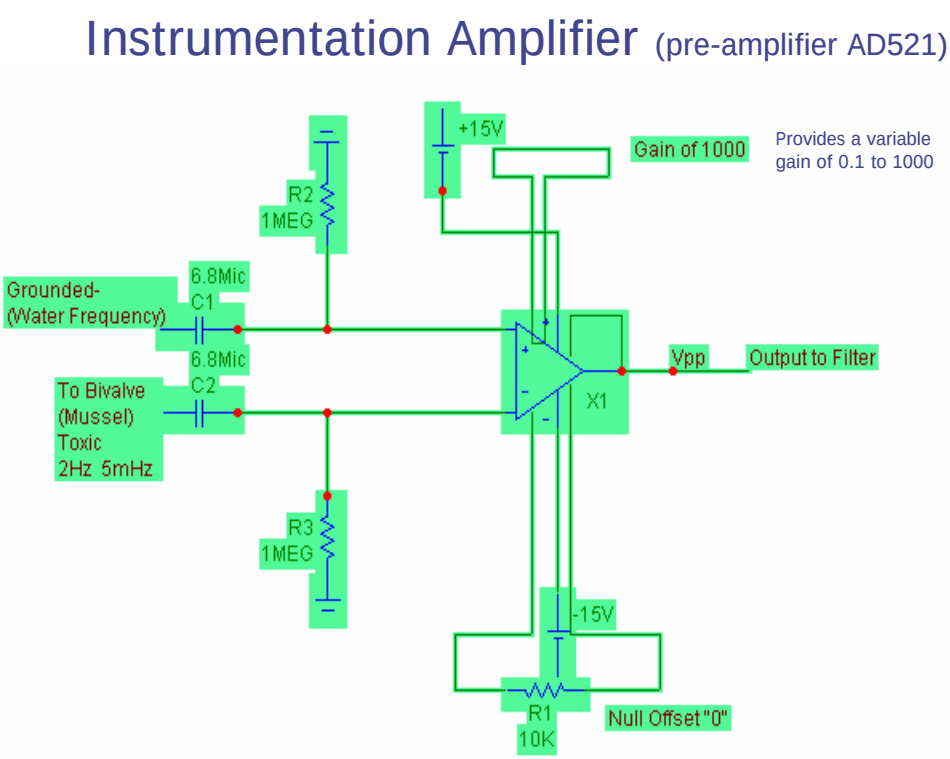

Figure 2: The preamplifier

First Stage Second-Order Low-Pass Butterworth Filter (LM324)

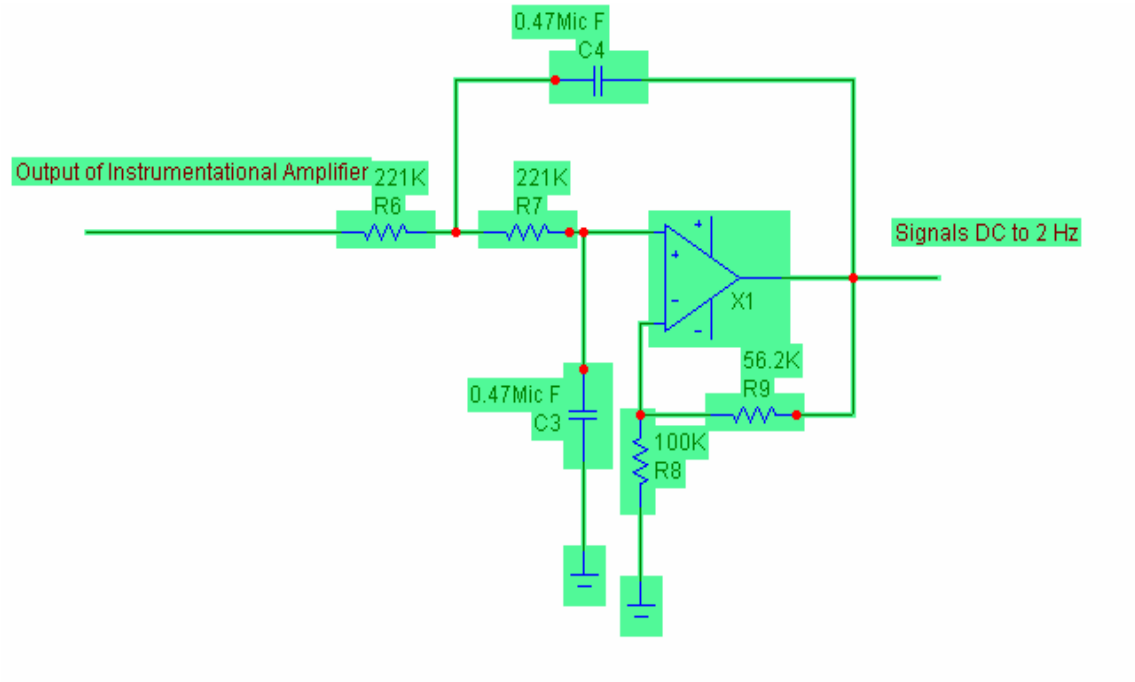

Figure 3: A low-pass filter design

Butterworth High-Pass Filter (LM324)

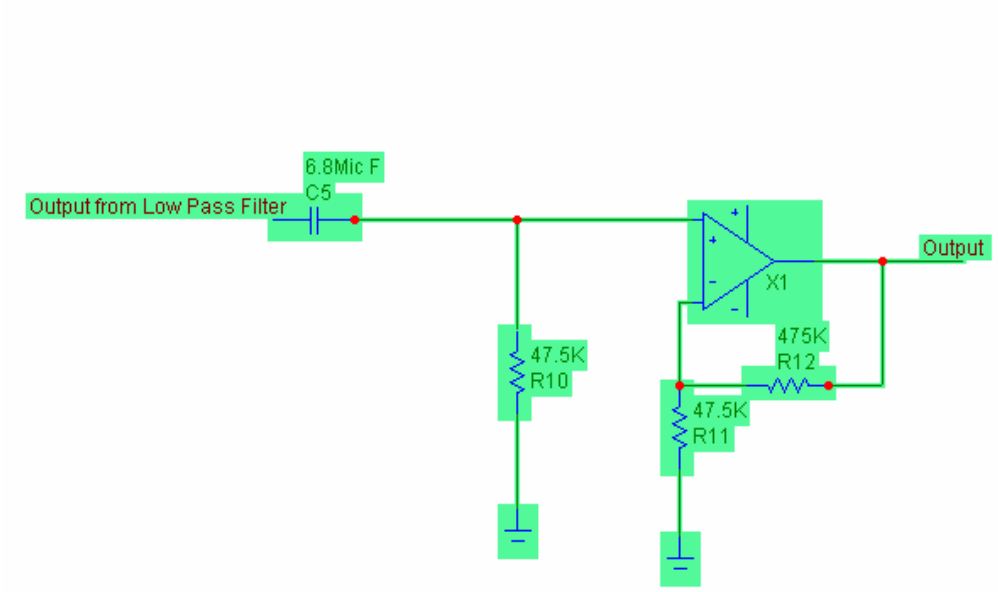

Figure 4: A high-pass filter design

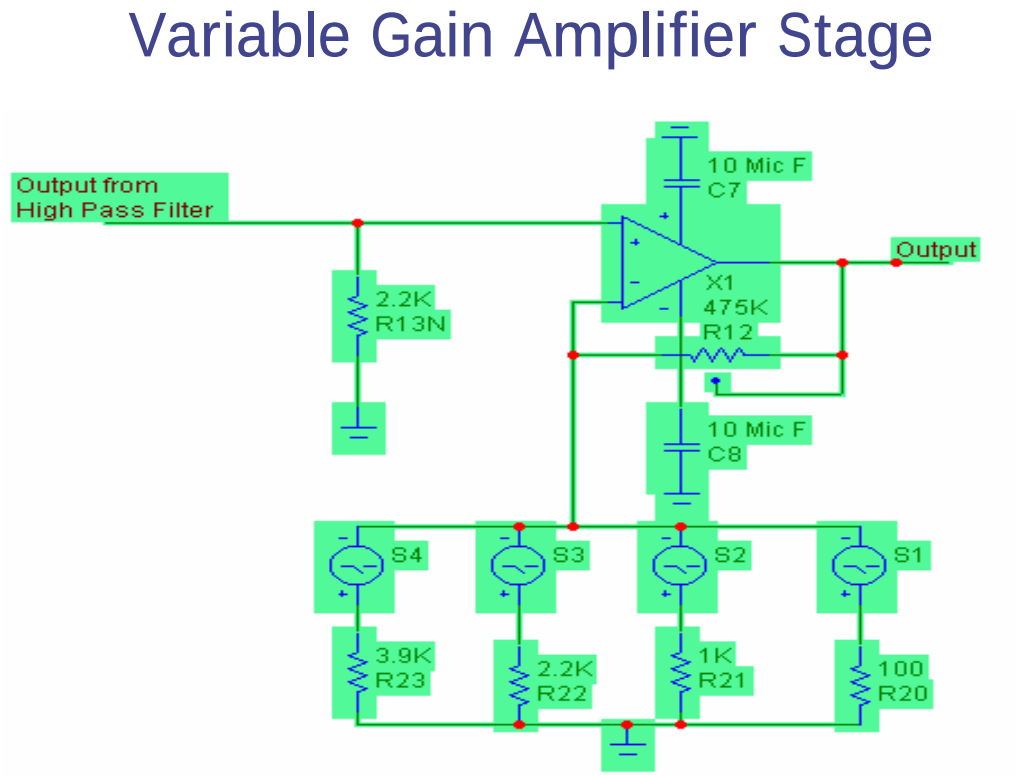

Figure 5: Variable gain Amplifier

The system also requires the design of a wireless communication RF system to transmit the acquired signals to a nearby receiving station. The basic building blocks of the wireless system include data modulator, phase-locked loop frequency synthesizer, spread-spectrum sequence generator, and RF power amplifier. Spread-spectrum transmission is superior to traditional narrow-band RF communication and can be designed to have high resistance to interference with RF spectrum users. Tight coupling such a communication system with the rest of bio-monitoring system will mandate placing it under water. The following section gives a brief overview of underwater acoustics and the major challenges facing designers of such system.

Underwater Acoustics

Until recently, underwater acoustics (UWA) communications systems were used in almost exclusively military applications. In past few years, there has been a huge increase in research and development of UWA communication systems for commercial applications. The need for such systems exists in applications such as remote control in offshore oil industry, speech transmission between divers, unmanned or autonomous undersea vehicle, and pollution monitoring of environmental systems.

In existing systems, transmitted signals can be grouped in four categories: control, telemetry, speech, and video. Control signals are used to send commands to submerged instrumentations and underwater robots. Data rates of control signals are usually small; however, highly reliable

systems are required. Telemetry signals are collected by devices such as hydrophones, and sonar systems. Data rates of telemetry signals are usually high, but very high reliability is not always required. Speech signals are transmitted between divers or between divers and surface stations. Speech transmission systems usually have data rates of few kilobytes per second. Video image transmission systems utilizing image compression techniques can send huge volume of data per second.

Underwater acoustics are usually band limited and suffers from the following features:

1. It produces irregular sound field at short distance. Unlike a point sound of sound in air, the intensity of sound near a point source in water is highly variable due to reflection from the oscillating surface boundary. Large and rapid fluctuation in amplitude or intensity is produced by reflection at the water surface.

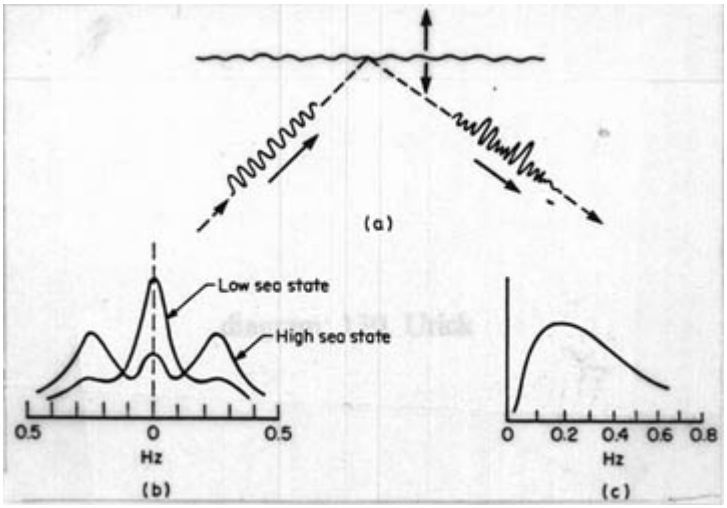

Figure a: a sinusoidal pulse is incident on the sea surface and is reflected and scattered as a pulse of variable amplitude and frequency; Figure b: Spectrum of the signal given in a; Figure c: the spectrum of the surface motion appears in, and widens, the spectrum of the incident sound

2. In addition to affecting the amplitude, the vertical motion of the surface wave superimposes itself upon the frequency of the sound incident upon it in the manner of frequency modulation. Therefore, it produces upper and lower sidebands in the spectrum of the reflected sound producing what is also known as the frequency smearing effect on a constant-frequency signal. *Frequencies different from the input frequencies appear at the output.* In addition, the generation of harmonics of the fundamental frequency occurs at the expense of the fundamental and portion of the power of the fundamental is converted into harmonics.
3. Underwater reverberation creates a shift in the center frequency of sinusoidal pulses causing what is also known as the Doppler shift. In addition, it causes a spreading out of the frequency band. In other words, it causes a change in the mean frequency and the spread of frequency spectrum.
4. Sound waves traveling in water encounter changes in temperature and pressure in different layer. In shallow waters, water temperature changes with depth and changes with seasons. This changes sound speed and signal refraction.
5. Water is more resistant substance than air; therefore, a greater force is required to drive pressure displacement in water. That is why underwater transducers use 'hard' piezoelectric

ceramics that have a reasonable displacement that force their energy into the water. This implies that designs that works in air may not work under water and some designs may work better than others may depending on the construction materials and the design technique. In addition, the quality of the water also affects underwater transmission systems; e.g., systems that can work in fresh water may not work in seawater or heavily contaminated water and systems that can work in aquarium may not work at all in realistic operating conditions.

Published literature provides solutions to many of the above stated problems. However, these solutions either implement computationally expensive algorithms requiring the use of a powerful computational engine and/or increase the power of the transmitted signal to compensate for the scattering and reflection effects.

Conclusions:

1. The communication system described above **cannot physically** work in real-life environment using a low power source. Designing the communication system as an underwater system will mandate the use of additional hardware and more power to operate the system. Commercial developed systems require substantial amounts of power in their transmitting modes. The question is How to power-up such a system?
2. Assuming that a solution for the power supply problem can be found, a large set of measurements of the system's operating condition including the ranges of the water quality, temperatures and velocity, noise, and reflective and refractive indices of the water. These measurements should be taken over a sufficient period in order to provide accurate design parameters for the system designer. This will require a much higher budget than the budget of this work

The main question:

Do we need to design an underwater communication system for this project?

In my opinion, the answer is NO. Environmental monitoring stations being developed and deployed in California, with funds from the NSF, use buoys to mark the locations of the stations and to carry a major portion of the system including data processing and communication. Similar scheme can easily be implemented in this project. The fish chamber can be attached to a buoy using a steel cable. The MEMS-based sensor can be integrated with an amplifier to amplify the sensed signals from the fish. The output of the amplifier should be connected via a coaxial cable that is parallel to the steel cable to the rest of the system housed in the buoy in a waterproof container along with a long-lasting set of batteries that supplies power to the system. The communication system for the modified design can efficiently be implemented using off-the-shelf standard components. The modified project will continue to have a research component consisting of the integration of a MEMS-based sensor with a VLSI-based amplifier. The design of such integrated device will be a major achievement. Such devices can be used in a wide variety of sensing applications.

BioSensor Project Progress Report
Dr. Esther T. Ososanya

Micromechanical systems (MEMS) technology integrates sensors, actuators, and electronics on the same silicon chip.
Work is in progress on the Mask layout of the following circuit modules and device structure:

1. Metal wire strips used as electrodes for detecting myoneural signals.

   (i) 3D Solid Model of the metal wires structure was built using the MEMS IntelliFab CAD tools to select and define the multiple microfabrication process steps layers for the microstrip device.

   (ii) The thin-film material properties of the microstrip structure were studied and analyzed using the IntelliSuite MeMaterial Analysis CAD tool. This allows us to characterize the thin-film material properties based on actual machine settings during fabrication. This step is important to ensure impedance matching of the probes and the instrumentation circuit to avoid signal loss. Accurate material properties are also necessary for accurate simulation results. Stress, Thermal variation, and Electrostatic analysis were also conducted on the microstrip device.

2. Instrumentation amplifier plus filter

   Using a circuit mask layout editor, the process technology for the mixed mode instrumentation circuit was defined. We are in the process of running SPICE simulation for transient analysis on this module.

3. Wireless Transmitter module

   (To be supplied by Dr. Mahmoud)

4. Final phase of this project will integrate all the above modules on the MEMS package, and repeat all the above simulations and analysis.