Survey of Renewable Energy Installations in Rural Ethiopia and Design of a Low Cost Inverter for Rural Applications

Samuel Lakeou, PhD (1, 2)
Mengesha Mamo, PhD (3), Gudeta Gelalcha BSc (4)
(1) Department of Electrical and Computer Engineering
University of the District of Columbia, Washington, DC, USA
(2) Director, Center of Excellence for Renewable Energy
University of the District of Columbia, Washington, DC, USA
(3) Associate Professor, Department of Electrical and Computer Engineering, Institute of Technology, Addis Ababa University, Addis Ababa, Ethiopia
(4) Executive Director, Hope2020, Addis Ababa, Ethiopia

The paper presents the results of a cooperative effort made by the University of the District of Columbia, the Faculty of Technology of Addis Ababa University and a local nongovernmental organization, Hope2020, for realizing for the first time, a survey of all existing renewable energy projects including their status of operation, in the largest State of the Federal Democratic Republic of Ethiopia,. The survey will be an invaluable reference document for the energy policy makers in the country as well as for all prospective renewable energy developers, including academic institutions, NGOs and private individuals.

Keywords: Stand-alone PV Systems

1 INTRODUCTION

In 2011, the Addis Ababa University (AAU), in collaboration with the University of the District of Columbia (UDC) and the NGO, Hope2020 had initiated a proposal to survey all the renewable energy projects installed in the state of Oromia of the Federal Democratic Republic of Ethiopia (FDRE). The proposal was submitted to the Ministry of Water and Energy (MoWE). During the preliminary inquiries made at the MoWE, the Minister and his chief of research and development had given positive comments about the intent to propose. However, due to unforeseen circumstances, the proposal has not received final approval but has not been rejected to date. It is hoped that a final determination will be made by the MoWE in the near future.

Under this circumstance, the trio, UDC/Hope22/AAU opted to start the survey of the **Solar and Wind energy-based** water development projects, in the Western Showa region of the state of Oromia, the largest state of the FDRE.

Most of the surveyed projects were undertaken primarily by Hope2020 and were designed and supported by UDC and AAU.

2 MAIN FEATURES OF THE SURVEYED PROJECTS

2.1 Solar vs wind power

The use of solar energy or/and wind energy was first tried with the project at the Fersi Senkele, near the town of Ambo, in South Showa, Oromia. However, due a former study [1], it was found that the use of inverters was deemed impractical for small scale projects utilizing shallow wells or springs. DC power was therefore preferred to AC and the pump used in all the surveyed projects is DC/AC pump [2]. Solar panels were considered to be adequate for such conditions. The wind energy generated by a wind turbine is supplemental to the solar energy but was found expandable. Out of the 6 projects surveyed, only one has a wind turbine. The rest are all equipped with solar panels. It is however possible that future projects may require a supplement of wind power for deep wells, typically with heads longer that 200m.

2.2 Scope of the survey

The scope of the survey was limited to the Western Showa in the surroundings of the city of Ambo. The first ever realized renewable energy project involving solar and wind energies, was inaugurated in 2008 at Farsi Senkele site. The inauguration of this project served as a milestone for the development of the subsequent projects. The local population and the one in the neighboring jurisdictions bought into the idea of renewable energy and therefore were readily agreeable to supporting similar projects close to its villages.

3 LOGISTICAL CONSIDERATIONS

In addition to the preliminary hydrogeological studies and the essential feasibility study with the accompanying engineering design, the implementation of a renewable energy project in rural areas requires the satisfaction of several conditions. In fact, major conditions need to be taken into account before the launch of any project.

All local districts in the country are organized in form of districts called Kebeles. Each Kebele has the authority to provide a construction permit. It can also provide public land for the project. In case public land is not available, the local villagers need to volunteer to give a piece of their own leased land to the project. It is therefore important to organize town hall meetings and convince the local population of the importance of allowing such project to be installed in their backyards. In this respect, the contribution of the NGO, Hope2020 is invaluable. Using the example of the first successful project in Farsi Senkele through testimonials of was instrumental in securing such support from the local jurisdictions.

4 SURVEYED PROJECTS

4.1 Farsie Senkele Project

Well: Farsi Senkele (Ambo)
1st Solar/Wind Project
Location: N07^0 69.881' E036^{0}83.132'
Elevation: 1676 m a.s.l
Yield/Discharge: .72l/s
Beneficiary: 2,250 villagers

Figure 1: Pictures of the Senkele Project

4.2 Kombolcha Village Project

Spring: Dochit
Location: N09^0 21.881' E-038^{0}03.132'
Elevation: 2619 m a.s.l
Yield/Discharge: .72l/s
Beneficiary: 1,750 villagers

Figure 2: Pictures of the Kombolcha Project

4.3 Giro Village Project

Spring: Giro
Location: N09^0 19.772' E-038^{0}02..615'
Elevation: 2,515 m a.s.l
Yield/Discharge: 2.3l/s
Beneficiary: 2,350 villager

Figure 3: Pictures of the Giro Project

4.4 Sombo/Badessa/Tamane Project

Spring: Babsa
Location: N09^0 21.817' E-038^{0}02.077'
Elevation: 2,608 m a.s.l
Yield/Discharge: 2.7l/s
Beneficiary: 900 villagers

Figure 4: Pictures of the Sombo/Badessa/Tamane Project

4.5 Shukute Rural Solar

Spring: Sombo/Faro
Location: N09^0 21.817' E-038^{0}02.077'
Elevation: 2608 m a.s.l
Yield/Discharge: 2.3l/s
Beneficiary: 7,800 villagers
Note: 2-level Boosting pump system

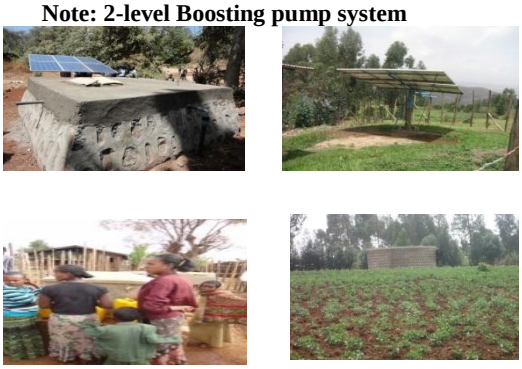

Figure 5 : Pictures of the Shukute Project

4.6 Chilanko Rural Kebele Project

Spring: Fallo
Location: N09^0 13.802' E-038^{0}05.867'
Elevation: 2893 m a.s.l
Yield/Discharge: .92l/s
Beneficiary: 2,955 villagers

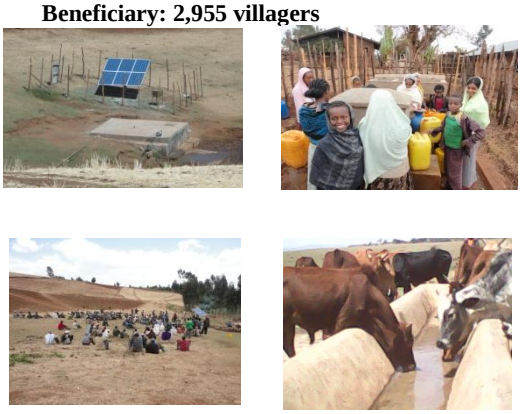

Figure 6: Pictures of the Chilanko Project

5 CONCLUSION AND FUTURE PLANS

The survey was limited to solar/wind projects in a relatively small region of the state of Oromia. There is still a lot to be done. We are confident that our attempt to get some support from the MoWE of FDRE will bear some fruit in the near future. We could then extend the survey to the whole state and further. Our ultimate goal is to survey all projects in the country so that the policy makers as well as the donor organizations have a good understanding of the extent of the need to support water development projects relying on renewable energy. The success of these projects should serve as a model to follow.

In the future, we also plan to support such projects for other kinds of applications such as lighting and small scale AC power. In fact, students and faculty at the department of electrical and computer engineering at the Institute of Technology of Addis Ababa University have design a low cost inverter (see Fig. 7) which is intended to complement similar projects for diverse applications

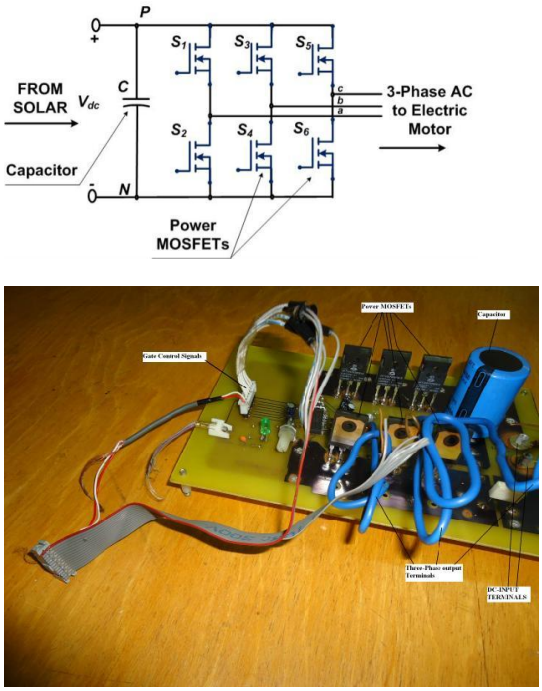

Figure 7: Inverter design to complement rural PV panels

requiring small AC power.

6. References

[1] *Low Cost, Novel PV Powered Water Delivery Project in Rural Ethiopia*, S. Lakeou et al, EUPVSEC25

[2]Anatomy of a Successful Renewable Energy Powered Shallow Well Water Project. S. Lakeou et al, ASEE 10